Pricing the Melting Ice Cube

An objective teardown of **Altria (MO):** A 6.6% yielding cash machine tethered to a shrinking structural foundation and a $16B trail of destroyed capital.

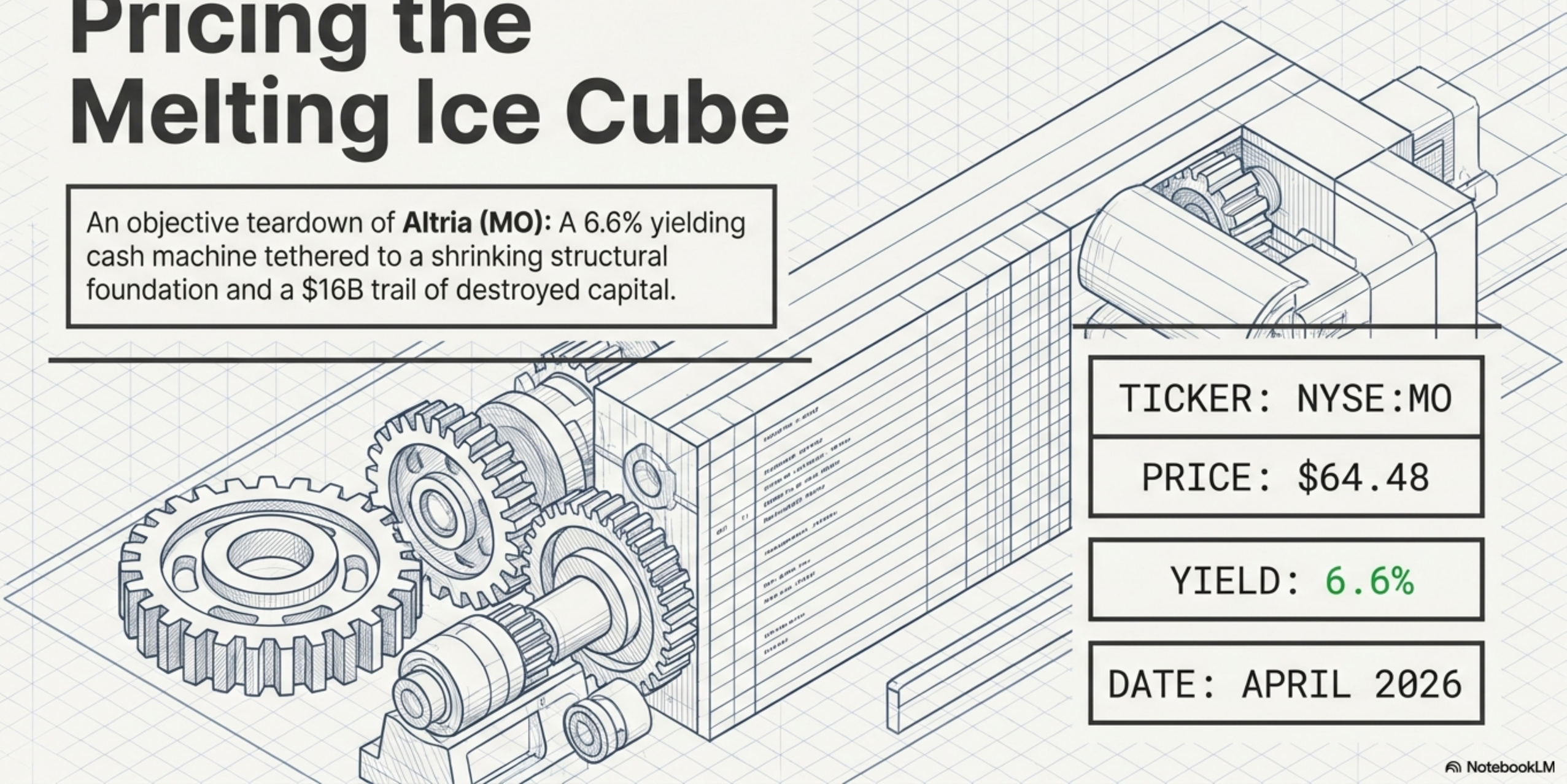

TICKER: NYSE:MO

PRICE: $64.48

YIELD: 6.6%

DATE: APRIL 2026

NotebookLM

The Two-Engine Diagnostic

Engine 1: Combustibles

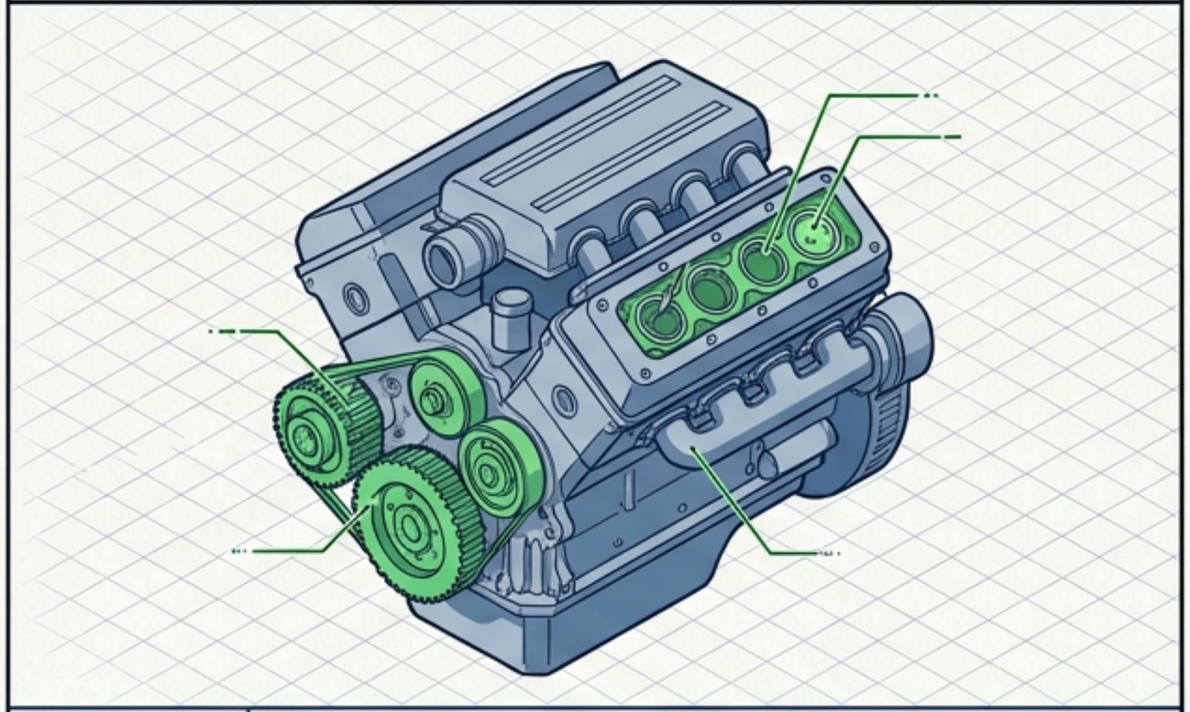

Margin:	61.6%–64.5% Adjusted OCI
Moat:	Deep, protected by the 1998 Master Settlement Agreement (MSA).
Cash Gen:	~$8.5B Annual Free Cash Flow.
Status:	Shrinking fast (-10% volume) but heavily insulated by pricing power.

Engine 2: Next-Gen & M&A

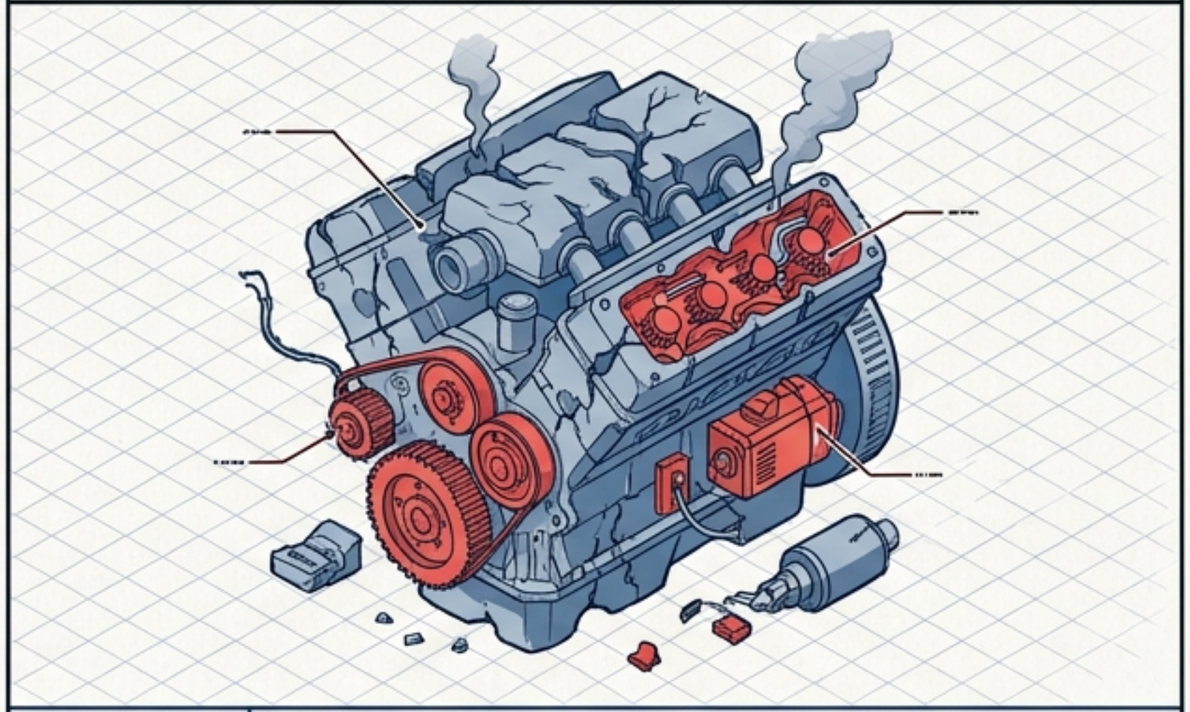

Scorecard:	~$17.6B deployed into JUUL, Cronos, NJOY. Current value: ~$1.0-1.3B.
Market Position:	Trailing significantly in Modern Oral (on! vs ZYN) and Heat-Not-Burn (Zero US share).
Status:	Structurally impaired. 2028 smoke-free growth targets formally suspended as of Feb 2025.

Altria is not a growth entity transitioning to a smoke-free future. It is a slow-melting ice cube optimized purely as a capital-return vehicle.

NotebookLM

The Combustible Cash Machine

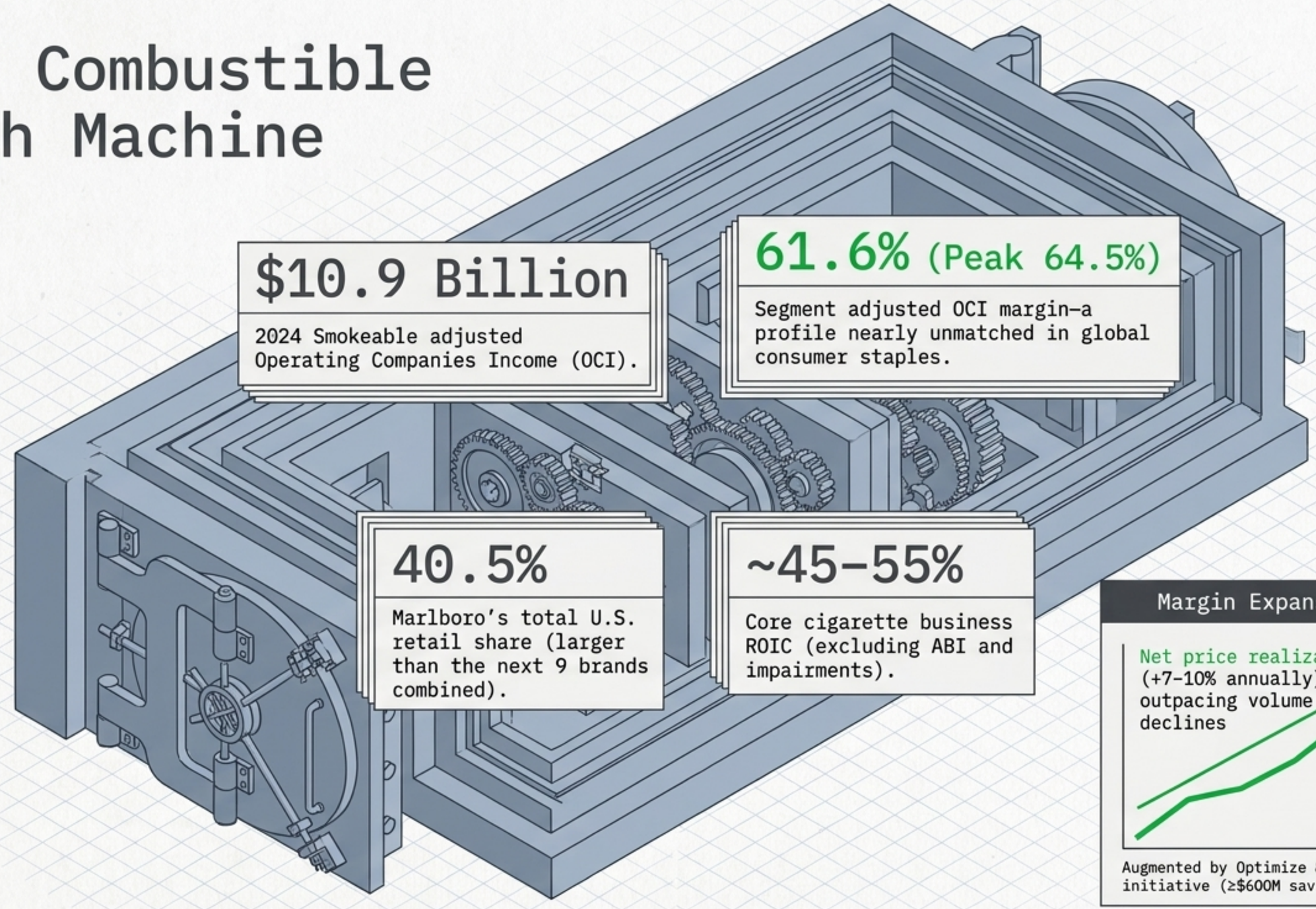

$10.9 Billion

2024 Smokeable adjusted Operating Companies Income (OCI).

61.6% (Peak 64.5%)

Segment adjusted OCI margin—a profile nearly unmatched in global consumer staples.

40.5%

Marlboro's total U.S. retail share (larger than the next 9 brands combined).

~45–55%

Core cigarette business ROIC (excluding ABI and impairments).

Margin Expansion Math

Augmented by Optimize & Accelerate cost initiative (≥$600M savings by 2029).

NotebookLM

The MSA Moat and the Chinese Bypass

The Wall Mechanics

Big Tobacco pays ~$9B/year (Altria ~$3-3.5B) based on market share.

New entrants must pay identical escrow rates per stick, killing low-cost competition and freezing the market for Marlboro.

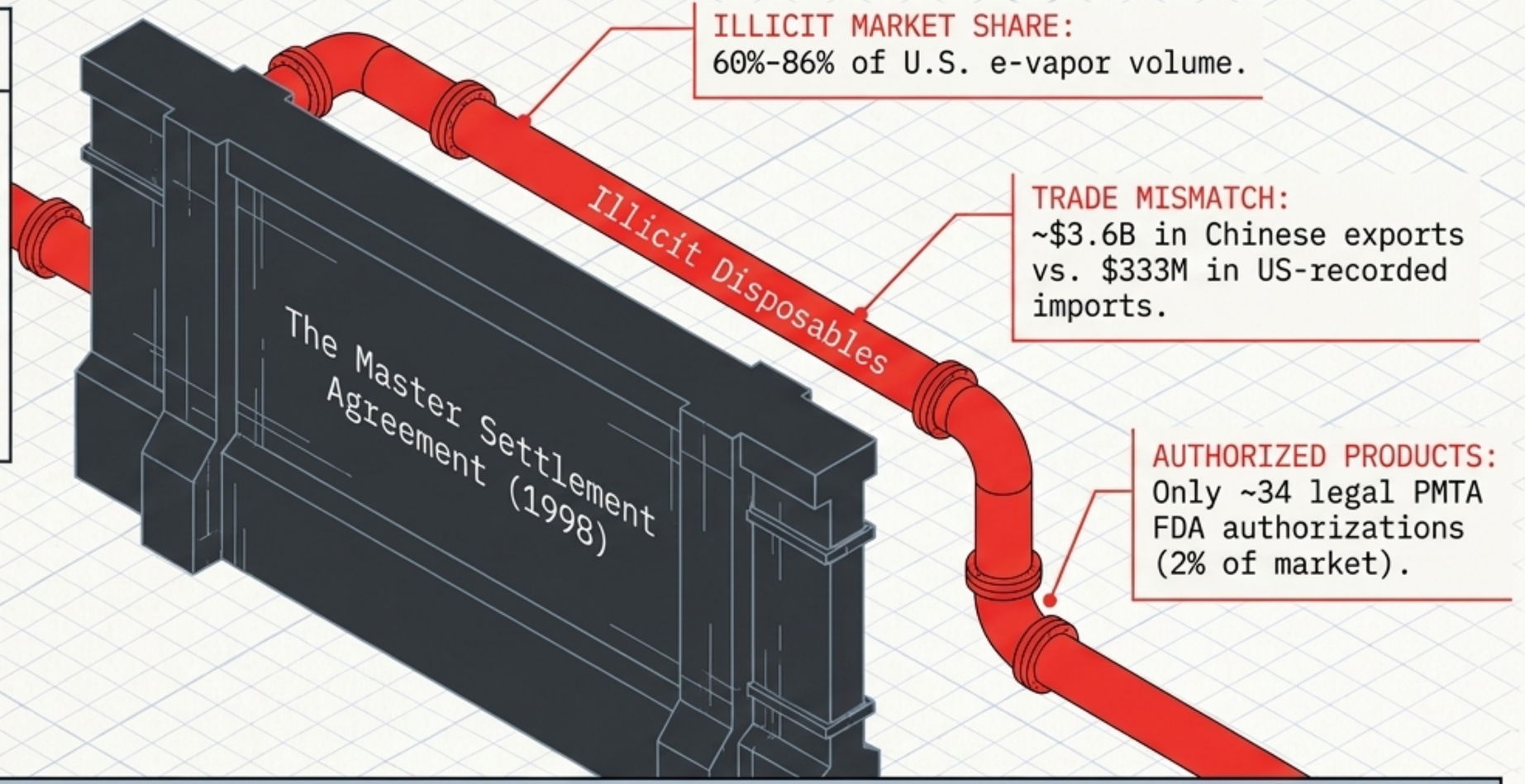

ILLICIT MARKET SHARE:
60%-86% of U.S. e-vapor volume.

TRADE MISMATCH:
~$3.6B in Chinese exports vs. $333M in US-recorded imports.

AUTHORIZED PRODUCTS:
Only ~34 legal PMTA FDA authorizations (2% of market).

Conclusion:
Chinese illicit vapes completely bypass the MSA escrow system, driving Altria's combustible volume decline from a historical 3-4% down to an unprecedented -10.6% in 2025.

NotebookLM

The Affordability Cross-Over

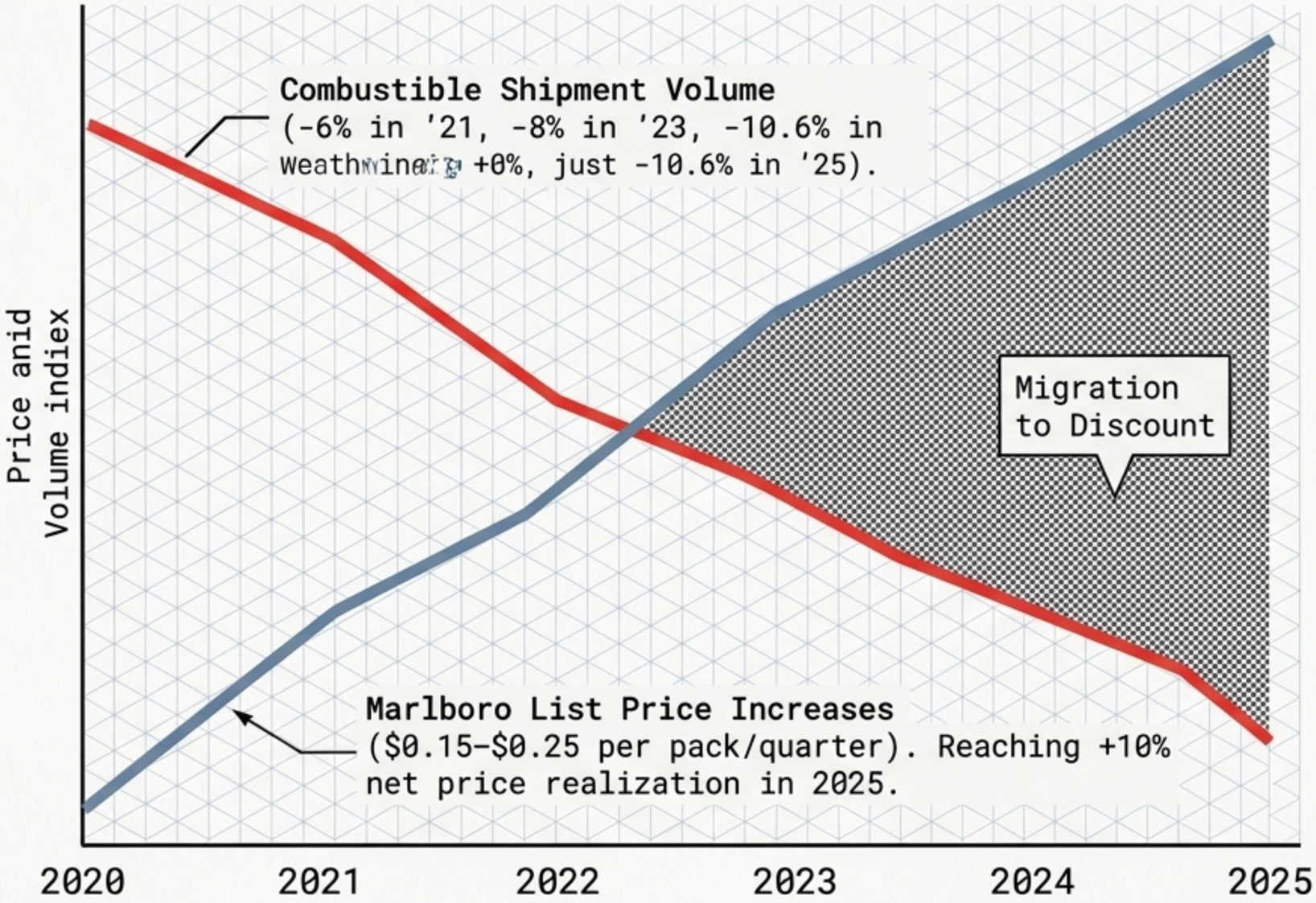

The Discount Squeeze

Discount segment market share has climbed from ~29% (2021) to 32.2% (Q3 2025)—the highest in a decade.

Vector's Montego is now >4% of US volume.

The Math Strain

To offset a 10% volume decline, Altria needs 10%+ net pricing just to keep revenue flat.

This directly fuels the downtrading cycle.

NotebookLM

The Nicotine Battlefield

Category	Altria's Asset	U.S. Market Position	Primary Competitor	Global Exposure
Combustibles	Marlboro	#1 (~45-46% total share)	BAT (Reynolds)	None (U.S. Pure Play)
Modern Oral Pouches	on!	Distant #2 (13.4% share, falling)	ZYN / PMI (~67% share)	None
E-Vapor	NJOY	Impaired (ACE banned by ITC Mar 2025)	BAT (Vuse) / Illicit Disposables	None
Heated Tobacco	Ploom JV	Non-existent (No commercial product)	IQOS / PMI (Launching heavily)	None

KEY TAKEAWAY: Outside of the shrinking combustible core, Altria has no dominant asset and zero international footprint to offset domestic declines.

NotebookLM

The Pouch War: Scale and Velocity

ZYN (PMI/Swedish Match)

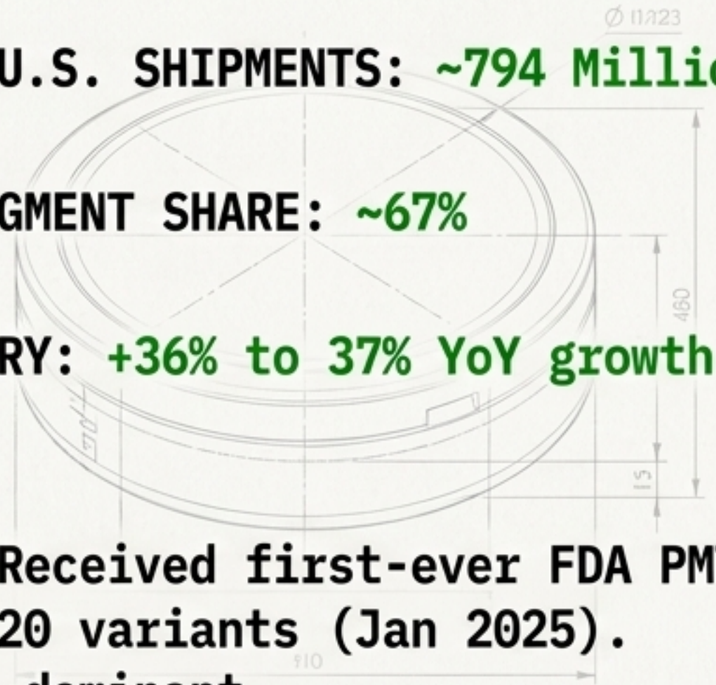

FY 2025 U.S. SHIPMENTS: ~794 Million cans

POUCH SEGMENT SHARE: ~67%

TRAJECTORY: +36% to 37% YoY growth

STATUS: Received first-ever FDA PMTAs for all 20 variants (Jan 2025). Category dominant.

on! (Altria)

FY 2025 U.S. SHIPMENTS: 177.8 Million cans

POUCH SEGMENT SHARE: 13.4% (-5.3 pp YoY)

TRAJECTORY: +10.9% (losing massive market share despite volume growth)

STATUS: Heavy promotional discounting to compete. Defensive rollout of on! PLUS in March 2026.

ZYN ships 4.5x as many cans as on! and commands premium pricing, while Altria discounts heavily just to maintain a shrinking sliver of the market.

NotebookLM

The Capital Destruction Ledger

1.	**JUUL** (Dec 2018)	**Deployed:** $12.8B. **Current Value:** **~$0** (excl. tax benefits). **Opportunity Cost:** **~$15B** in forgone buybacks.
2.	**Cronos** (Mar 2019)	**Deployed:** $1.8B. **Current Value:** **~$300–450M**.
3.	**NJOY** (Jun 2023)	**Deployed:** $3.0B. **Impairments:** **-$2.2B** (following ITC patent loss). **Current Value:** **~$600-800M**.

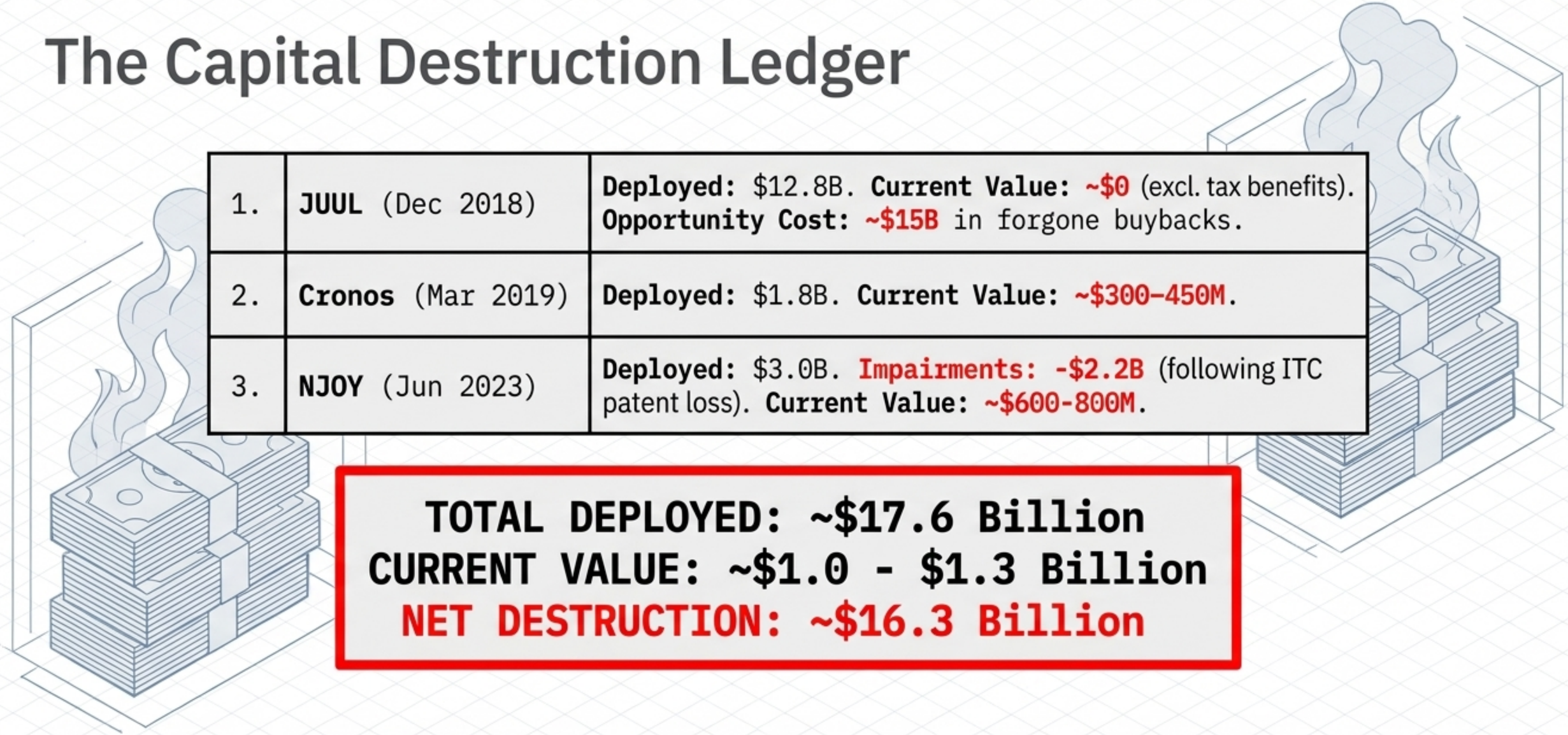

TOTAL DEPLOYED: ~$17.6 Billion
CURRENT VALUE: ~$1.0 - $1.3 Billion
NET DESTRUCTION: ~$16.3 Billion

Footnote: This $16B loss represents ~15% of Altria's current market capitalization–larger than two full years of net income–wiped out across three consecutive CEOs.

NotebookLM

The Anatomy of EPS Growth

Altria's 6.8% Adjusted EPS CAGR

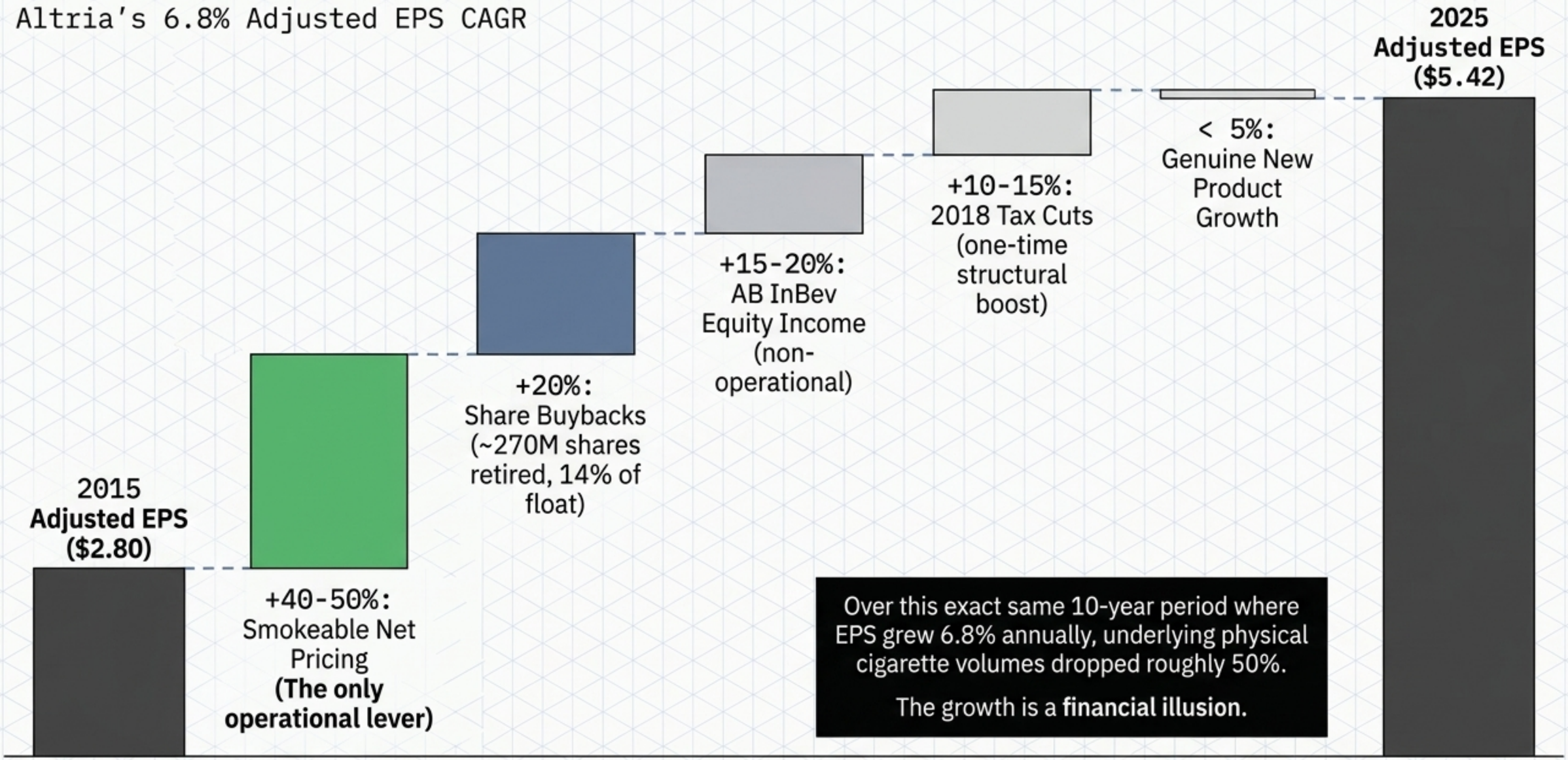

Over this exact same 10-year period where EPS grew 6.8% annually, underlying physical cigarette volumes dropped roughly 50%.

The growth is a **financial illusion.**

NotebookLM

The Cash Return Vehicle

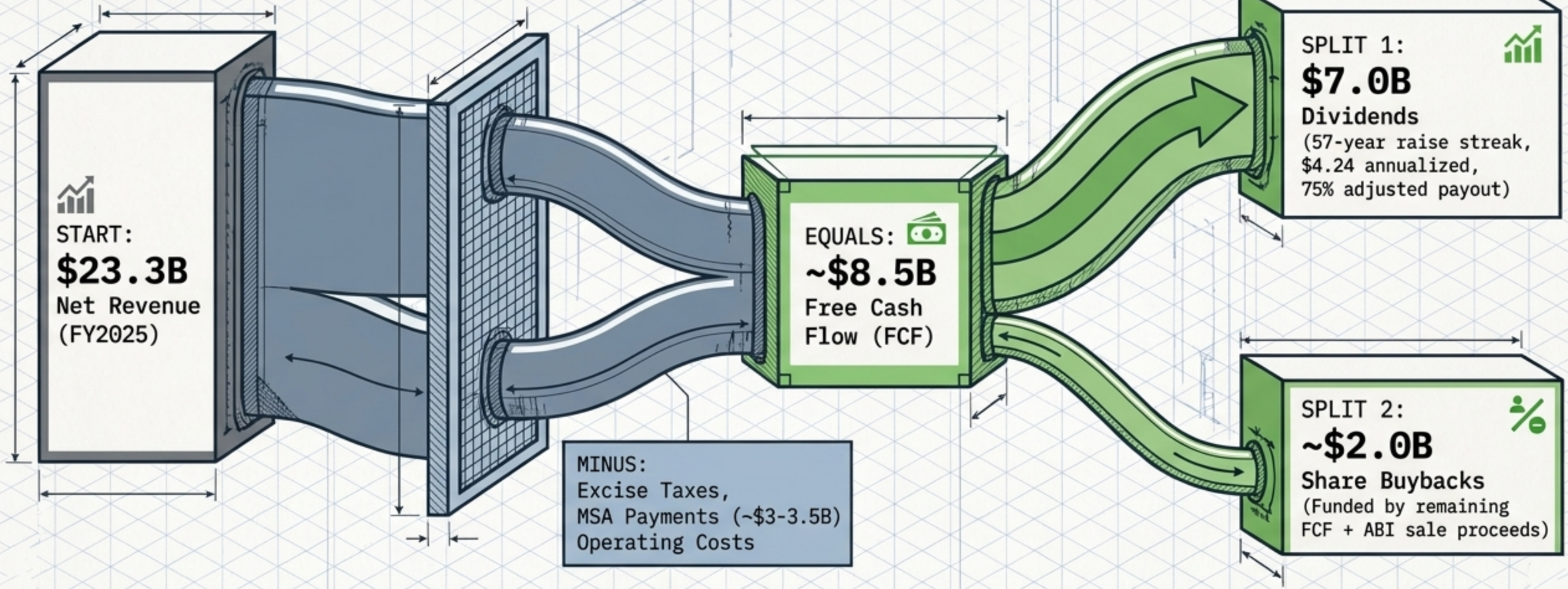

Synthesis: CapEx is a microscopic $300-375M (~1.4% of revenue). Altria requires almost zero reinvestment to operate. Every dollar of margin flows directly to the yield and the share count.

NotebookLM

Pricing the Asset

VALUATION COMPARISON

Metric	MO	PM	BTI	IMB
Forward P/E	10.5-11.9x	High-teens (22.0x trailing)	12.1x	8.7x
Dividend Yield	6.6%	3.5-3.7%	5.4-5.7%	5.1-5.9%
EV/EBITDA	~10.6x	~15.5-17.2x	–	–
Key Growth Driver	NJOY / on! (Weak, impaired)	ZYN / IQOS (Category Dominant)	Vuse / Velo	Legacy
Geography	100% U.S.	Global	Global	Global

The ABI Backstop

Altria holds ~154-159M shares of AB InBev.

This is a liquid, off-balance-sheet reserve reserve worth ~$9.7-10.0B—representing ~9% of Altria's entire market cap, providing a hidden safety net for future buybacks.

MO's valuation discount is earned. The market correctly prices PM as a compounding growth franchise, and MO as a high-yield, fixed-income equivalent.

NotebookLM

The Terminal Risk Matrix

Scenario 1: Bull (The Menthol Reprieve)

CONDITIONS:
- Volumes stabilize at -6%.
- Illicit vapes face harsh FDA/Customs enforcement.
- Federal menthol ban remains permanently dead (withdrawn Jan 2025).



OUTCOME:
Pricing easily outpaces volume.
EPS grows +5-6%.
Multiple re-rates to 13x.



Scenario 2: Base (The Wasting Bond)

CONDITIONS:
- Volumes run -8% to -10%.
- Net revenue drops -2% to -3% annually.
- Cost cuts and buybacks buffer the bottom line.
- NJOY/on! remain distant laggards.

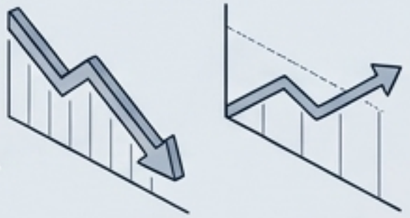

OUTCOME:
EPS grows +2-4%.
Dividend grows +3%.
Total return essentially matches the 6.6% yield.



Scenario 3: Bear (Elasticity Breaks)

CONDITIONS:
- Volumes hit -12%+ (GLP-1s + illicit vapes).
- Deep discount segment breaches 40%.
- Pricing power breaks at +5%.

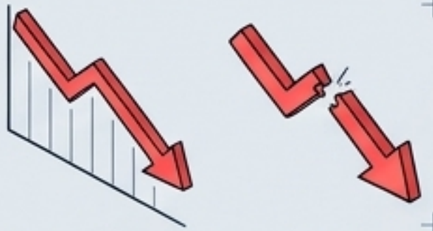

OUTCOME:
Revenue craters. FCF drops.
Dividend frozen or cut.
Stock declines 30-40%.



NotebookLM

The Verdict: A High-Yield Wasting Bond

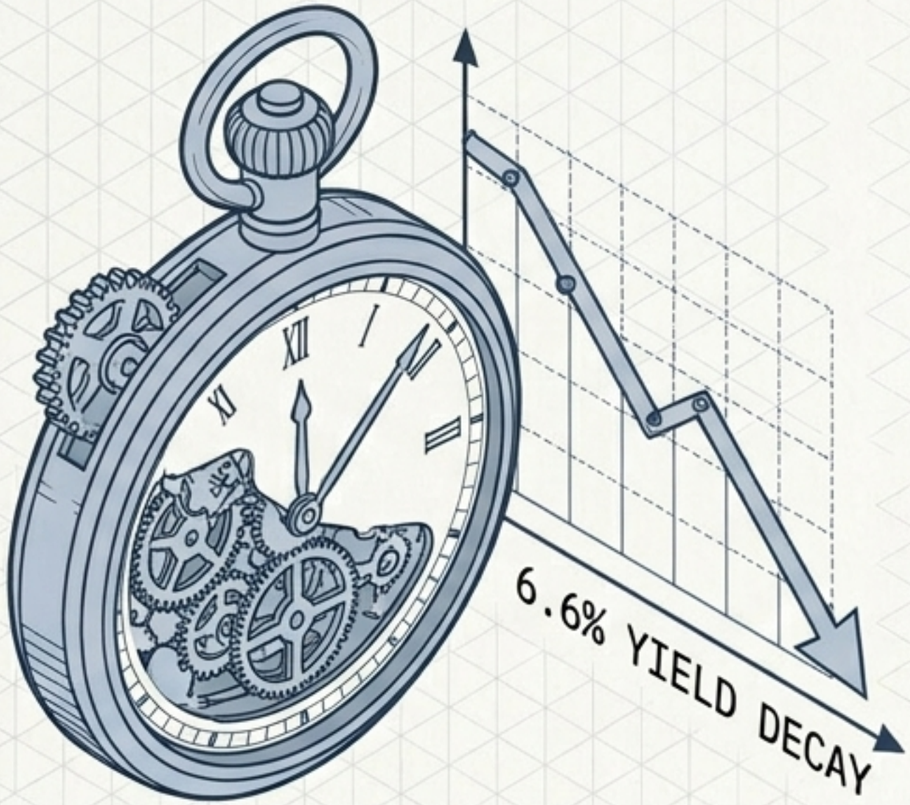

The Yield is Real, but Terminal

The 6.6% dividend is safely covered by a 62% margin fortress, but it is paid out of a melting core shrinking at 10% a year.

Growth is an Illusion

$16B in M&A destruction and a suspended 2028 smoke-free target prove Altria cannot buy or build its way out of combustibles.

Management is Continuity, Not Change

The May 2026 succession of CFO Sal Mancuso to CEO signals a continuation of aggressive financial engineering—buybacks and dividends—rather than a strategic pivot.

Final Takeaway: Altria is not a growth equity. It is a mature, high-margin cash return vehicle. Investors buying at $64.48 are purchasing a 6.6% bond whose principal decays slightly every year, betting that the Marlboro pricing umbrella will outlast the rise of illicit vapes.

NotebookLM